RoHS

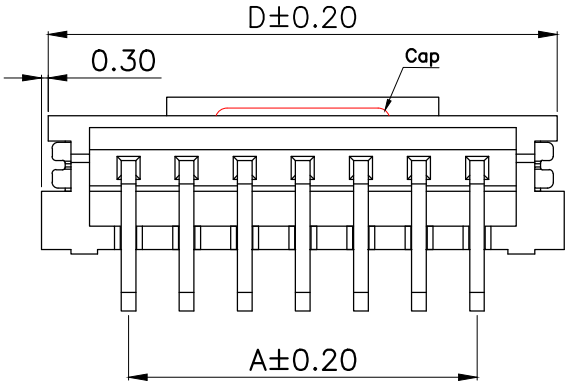

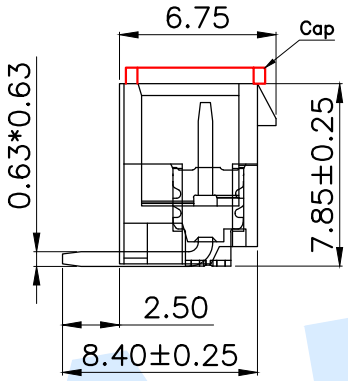

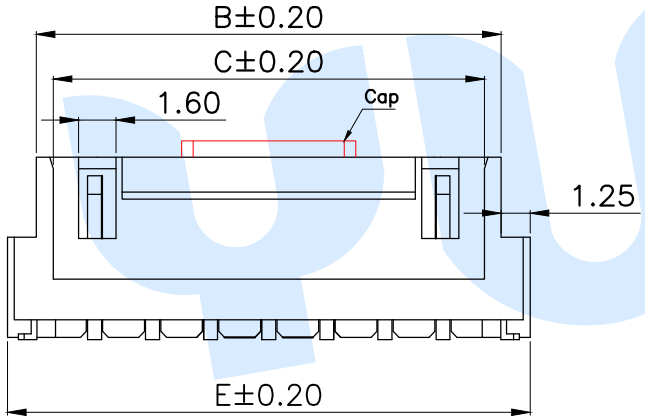

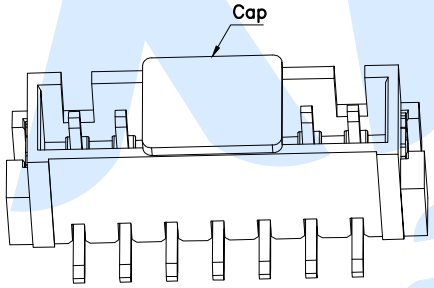

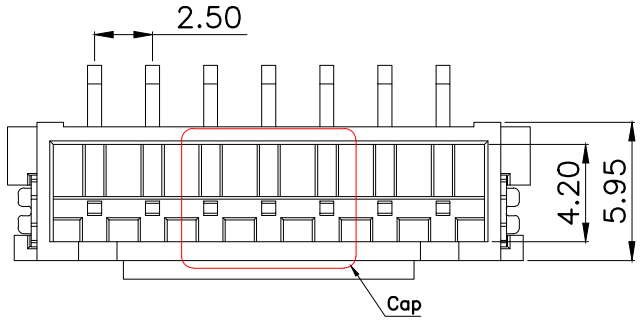

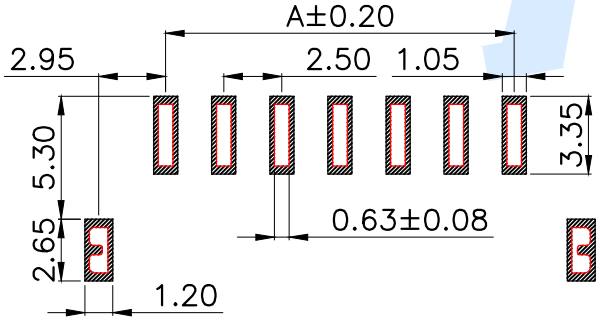

适用线路板(PCB LAYOUT)

Model No.	Pin	A	B	C	D	E
WAFER-XHB2.54-2PLT-W1	2	2.50	7.50	6.05	9.40	10.00
WAFER-XHB2.54-3PLT-W1	3	5.00	10.00	8.55	11.90	12.50
WAFER-XHB2.54-4PLT-W1	4	7.50	12.50	11.05	14.40	15.00
WAFER-XHB2.54-5PLT-W1	5	10.00	15.00	13.55	16.90	17.50
WAFER-XHB2.54-6PLT-W1	6	12.50	17.50	16.05	19.40	20.00
WAFER-XHB2.54-7PLT-W1	7	15.00	20.00	18.55	21.90	22.50
WAFER-XHB2.54-8PLT-W1	8	17.50	22.50	21.05	24.40	25.00
WAFER-XHB2.54-9PLT-W1	9	20.00	25.00	23.55	26.90	27.50
WAFER-XHB2.54-10PLT-W1	10	22.50	27.50	26.05	29.40	30.00
WAFER-XHB2.54-11PLT-W1	11	25.00	30.00	28.55	31.90	32.50
WAFER-XHB2.54-12PLT-W1	12	27.50	32.50	31.05	34.40	35.00
WAFER-XHB2.54-13PLT-W1	13	30.00	35.00	33.55	36.90	37.50
WAFER-XHB2.54-14PLT-W1	14	32.50	37.50	36.05	39.40	40.00
WAFER-XHB2.54-15PLT-W1	15	35.00	40.00	38.55	41.90	42.50
WAFER-XHB2.54-16PLT-W1	16	37.50	42.50	41.05	44.40	45.00
WAFER-XHB2.54-17PLT-W1	17	40.00	45.00	43.55	46.90	47.50
WAFER-XHB2.54-18PLT-W1	18	42.50	47.50	46.05	49.40	50.00
WAFER-XHB2.54-19PLT-W1	19	45.00	50.00	48.55	51.90	52.50
WAFER-XHB2.54-20PLT-W1	20	47.50	52.50	51.05	54.40	55.00

WAFER-XHB2.54-□□PLT-W1(-P=盘装, 非盘装不启用)

Specifications/技术规格:

1.Poles/线数：2～20P
2.Wire range/适用线规：AGW 28#～22#
3.Applicable PC board thickness/适用PC板厚度：1.6mm
4.Current rating/额定电流：3.0A
5.Voltage rating/额定电压：250V DC/AC
6.Insulation Resistance/绝缘电阻：1000MΩ Min
7.Dielectric Withstanding/ 耐电压：1000V AC/minute
8.Contact Resistance/ 接触电阻：20mΩ Max
9.Operating Temperature/ 工作温度：-25℃ to +85℃

NO.	Name	Number	Qty	Materil	Remarks
Ⓒ	Soldering lug		1	Brass	Plating Sn
Ⓑ	Terminal			Brass	Plating Sn
Ⓐ	Housing		1	LCP	Off White

YUANDI® Yuandi Electronics Co,Ltd

angle	±2°	design	date	name	WAFER CONNECTOR
10~30	±0.30	Review	date		
5~10	±0.20	Approved	date	model	WAFER-XHB2.54-□□PLT-W1
~ 5	±0.10	Drawing number:			
modify / Review / Approved	Tolerance not specified	Proportion 1:1	unit mm	gape number	A4