△4 TABLE 1

SUB ASSEMBLY PART NO. AND CH. CODE	NO.	PART NO. AND CH. CODE	△4 PART NAME	MATERIAL	COLOR	QTY.
7283-3020 ETC. △4 (SEE TABLE 2)	①	SEE TABLE 2	8.0 2P HOUSING FEMALE	△1 HPA	SEE TABLE 2	1
	②	△4 7157-4339 (7B57-4339)	8.0 2P HOUSING SPACER FEMALE	△3 PBT	NATURAL	1

△2 TABLE 2

SUB ASSEMBLY PART NO. AND CH. CODE	PART NO. AND CH. CODE	COLOR
△4 7283-3020, E (7C83-3020)	△4 7183-3020 (7B83-3020)	NATURAL
7283-3020-30, E	7183-3020-30	BLACK
7283-3020-40, E	7183-3020-40	LIGHT GRAY
7283-3020-50, E	7183-3020-50	ORANGE
7283-3020-90, E	7183-3020-90	BLUE

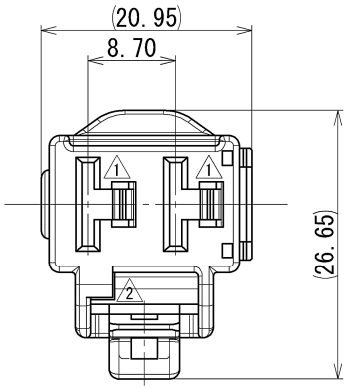

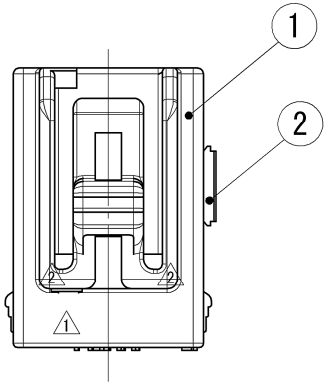

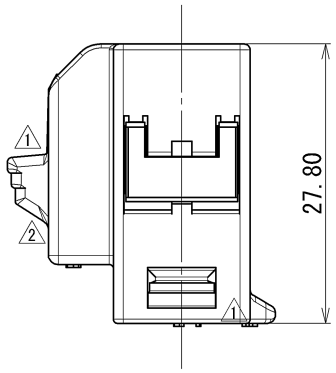

注記

1. かん合相手品番　：7282-3020 ETC.
△4 2. 取扱説明書No.　：YPES-15-126
△4 3. （　）内の品番はA/B回路及び特別管理回路に使用すること。

NOTES

1. MATING PART NO.　: 7282-3020 ETC.
△4 2. HANDLING MANUAL NO.　: YPES-15-126
△4 3. PART NUMBERS IN PARENTHESIS SHALL BE USED FOR AIR BAG(A/B) CIRCUITS AND OTHER CIRCUITS DESIGNATED FOR SPECIAL CONTROL.

ISSUE MARK

LET	DATE	REVISION RECORD	NO.	CHKD
△4	2014/11/27	ADDED A/B PART NO., ETC.	C14-Z710	J.B
△3	2004/03/09	CHANGED MATERIAL & PART NAME, E	C04-X188	Y.S
△2	1999/04/22	CHANGED FORM & NOTES, D	C99-L583	T.M
△1	1995/12/13	CHANGED FORM & ADDED PART NO., C	C95-N070	H.K
	1990/11/10	NEW	C90-M214	M.H

GENERAL TOLERANCE

	10MAX	50MAX	100MAX	250MAX	2500VR	ANGLE	ECCENT
A	±0.15	±0.2	±0.3	±0.5	±0.75	±30'	0.1
B	±0.2	±0.3	±0.55	±0.95	±1.4	±30'	0.1
Ⓒ	±0.3	±0.5	±0.8	±1.4	±2	±30'	0.15

SPECIFIED　　MASS

CUSTOMER
CUSTOMER PART NO.　　CUSTOMER DWG NO.
OFFICE　　TRIAL PART NO.
VENDOR
VENDOR NO.

DWG TYPE	DWG SOURCE	DWG DATE	UNIT	SCL	ANGLE
R	NEW	1990/11/10	mm	2:1	3

APPROVED	CHECKED	CHECKED	DESIGN	DRAWN
S. SUZUKI	M. NAGANO	———	Y. SAWADA	J. BONTIGAO
2014/11/27	2014/11/27	———	1988/10/03	2014/11/27

MATL. SPEC.: SEE TABLE 1　　TREAT. & FIN.

NAME: △4 8.0 2P HOUSING FEMALE SUB ASSEMBLY

PART NO. CH. CODE: △4 7283-3020 ETC. (7C83-3020)

DWG NO.: 7283-3020:R　　SET DWG NO.

YAZAKI CORPORATION