TABLE 1

SUB ASSEMBLY PART NO. AND CH. CODE	NO.	PART NO. AND CH. CODE	MATERIAL	COLOR	QTY.
7282-5830 ETC.	1	SEE TABLE 2	PBT	SEE TABLE 2	1
	2	7158-4721 △2(7B58-4721)	PBT	NATURAL	1

TABLE 2

	SUB ASSEMBLY PART NO. AND CH. CODE	PART NO. AND CH. CODE	COLOR
△1	7282-5830, A	7182-5830	NATURAL
	7282-5830-30, A	7182-5830-30	BLACK
△2	7282-5830-51, A	7182-5830-51	SAE ORANGE
△2	7282-5830-70, A (7C82-5830-70, A)	7182-5830-70 (7B82-5830-70)	YELLOW
△2	7282-5830-90, A	7182-5830-90	BLUE

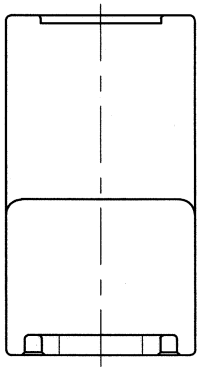

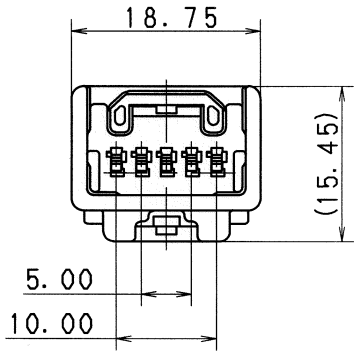

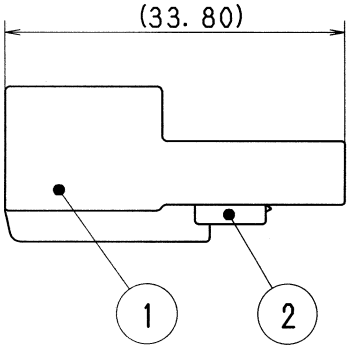

注記

△2 1. 嵌合相手品番 : 7283-5830 ETC. (7C83-5830 ETC.)

△2 2. 適用端子品番 : 7114-4233-08 (金), 7114-4233-02 (錫)

△2 3. ( ) 内品番は、エアバッグ (A/B) 回路及び特別管理回路に使用する時に適用すること。

NOTES

△2 1. MATING PART NO. : 7283-5830 ETC. (7C83-5830 ETC.)

△2 2. APPLICABLE TERMINAL NO. : 7114-4233-08 (GOLD), 7114-4233-02 (TIN)

△2 3. PART NUMBERS IN PARENTHESIS SHALL BE USED FOR AIR BAG (A/B) CIRCUITS AND OTHER CIRCUITS DESIGNATED FOR SPECIAL MONITORING.

ISSUE MARK

LET	DATE	REVISION RECORD	NO.	CHKD
△2	05/09/19	ADDED COLOR PART NO., ETC.	C05-ZC82	N. T
△1	98/07/14	ELIMINATED COLOR NO.	C98-M140	T. M
	97/05/23	NEW	C97-L859	H. K

GENERAL TOLERANCE

	10MAX	50MAX	100MAX	250MAX	2500VR	ANGLE	ECCENT
A	±0.15	±0.2	±0.3	±0.5	±0.75	±30′	0.1
B	±0.2	±0.3	±0.55	±0.95	±1.4	±30′	0.1
C	±0.3	±0.5	±0.8	±1.4	±2	±30′	0.15

SPECIFIED

MASS g

CUSTOMER

CUSTOMER PART NO. | CUSTOMER DWG NO.

OFFICE | TRIAL PART NO.

VENDOR

VENDOR NO.

DWG TYPE	DWG SOURCE	DWG DATE	UNIT	SCL	ANGLE
R	NEW	97/05/23	mm	2:1	3

APPROVED	CHECKED	CHECKED	DESIGN	DRAWN
山田	三輪	池田	T. MIWA	O. DAR KOMEL GALIZA
'05.9.22	05.09.20	05.09.20	96/05/20	05/09/19

MATL. SPEC. SEE TABLE 1 | TREAT. & FIN.

NAME △2 1.0Ⅲ (040Ⅲ) 5P CONNECTOR HOUSING MALE SUB ASSEMBLY

PART NO. CH. CODE △2 7282-5830 ETC. (7C82-5830-70)

DWG NO. 7282-5830:R | SET DWG NO.

YAZAKI CORPORATION