PART NO. AND CH. CODE	6 W1±0.4	6 W2±0.4	6 H1	6 H2	A	B	WIRE SIZE	MATERIAL
7116-4020, B 5 (7B16-4020, B)	2.30	3.60	(2.19)	(3.19)	3.00	6.20	10 CHFUS 0.35～AVS 0.50 EQUIVALENT	9 BRASS (t=0.25)
7116-4021, B 5 (7B16-4021, B)	3.00	4.50	(2.91)	(3.89)	4.00	7.20	10 CHFUS 0.75～AVS 1.25 EQUIVALENT	9 BRASS (t=0.25)
7116-4022, B 5 (7B16-4022, B)	4.20	4.50	(4.06)	(3.89)	4.00	7.20	AVSS 2 EQUIVALENT	9 COPPER ALLOY (t=0.25)

注記

5 1. ( ) 内品番は、エアバッグ (A/B) 回路及び特別管理回路に使用する時に適用すること。

10 2. 取扱説明書No. YPES-15-080

NOTES

5 1. PART NUMBERS IN PARENTHESIS SHALL BE USED FOR AIR BAG (A/B) CIRCUITS AND OTHER CIRCUITS DESIGNATED FOR SPECIAL MONITORING.

10 2. HANDLING MANUAL NO. YPES-15-080

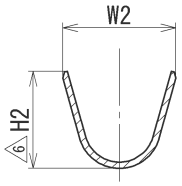

SEC. Q-Q

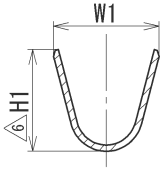

SEC. P-P

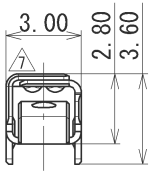

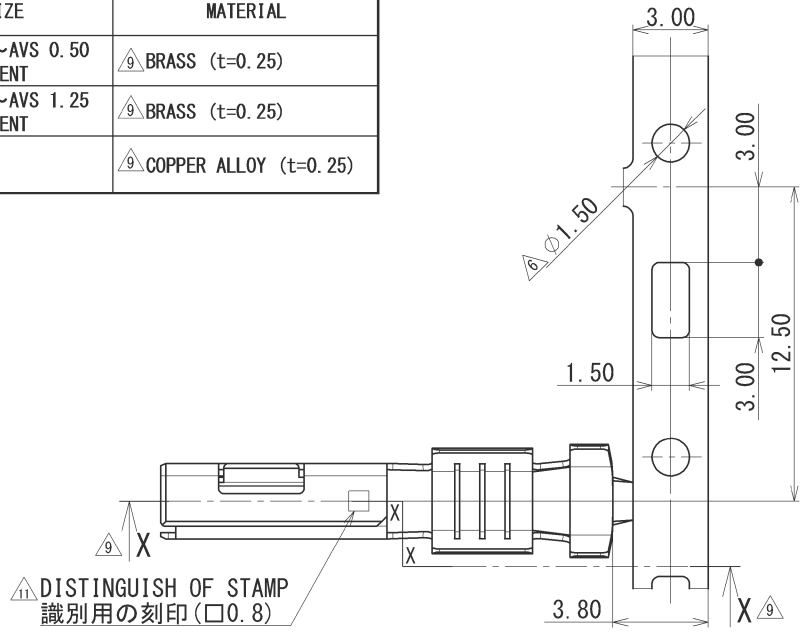

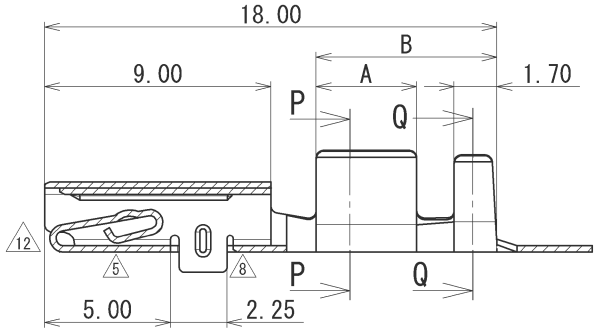

9 SEC. X-X

LET	DATE	REVISION RECORD	NO.	CHKD
12	2016/07/20	DRAWING MAINTENANCE	C16-P309	M. S
11	2014/01/14	ADDED DISTINGUISH OF STAMP	C14-Z020	A. D
10	2012/02/21	CHANGED NOTES, ETC.	C12-Z280	E. I
9	2005/11/10	CHANGED PART NAME, ETC.	C05-ZF20	T. O
8	2001/06/07	CHANGED PART NAME & FORM, B	C01-X544	A. T
7	2000/11/08	CHANGED FORM & DIMENSION	C00-M342	Y. S
6	1998/07/18	CHANGED DIMENSION & ADDED NOTE	C97-N452	H. K
5	1996/10/28	CHANGED FORM & ADDED A/B PART NO., A	C96-M845	H. K
4	1993/02/23	RENEW	C93-6226	I. I
3	1990/07/31	CHANGED FORM	C90-6983	K. O
2	1990/07/02	CHANGED FORM	C90-L752	K. O
1	1989/03/17	誤記訂正	C89-6441	A. H
	1988/08/24	NEW	8MC-1022	A. H

GENERAL TOLERANCE

	10MAX	50MAX	100MAX	250MAX	2500VR	ANGLE	ECCENT
A	±0.15	±0.2	±0.3	±0.5	±0.75	±30'	0.1
B	±0.2	±0.3	±0.55	±0.95	±1.4	±30'	0.1
C	±0.3	±0.5	±0.8	±1.4	±2	±30'	0.15

SPECIFIED

MASS

CUSTOMER

CUSTOMER PART NO. | CUSTOMER DWG NO.

OFFICE | TRIAL PART NO.

VENDOR

VENDOR NO.

DWG TYPE	DWG SOURCE	DWG DATE	UNIT	SCL	ANGLE
R	NEW	1993/02/23	mm	6 5:1	3

APPROVED	CHECKED	CHECKED	DESIGN	DRAWN
S. SUZUKI	M. NAGANO		M. TSUJI	M. SUZUKI
2016/07/20	2016/07/20		1987/07/27	2016/07/20

ISSUE MARK

MATL. SPEC. SEE TABLE | TREAT. & FIN. TIN PLATING

NAME 9 2.3Ⅱ TERMINAL FEMALE

PART NO. CH. CODE 7116-4020 ETC. 5 (7B16-4020 ETC.)

DWG NO. 7116-4020:R | SET DWG NO.

YAZAKI CORPORATION