RUBBER PART GENERAL TOLERANCE			
PART DIM.	1	2	③
0 TO 3	± 0.2	± 0.3	± 0.4
3 TO 6	± 0.2	± 0.4	± 0.5
6 TO 10	± 0.3	± 0.5	± 0.6
10 TO 18	± 0.3	± 0.6	± 0.8
18 TO 30	± 0.4	± 0.8	± 1.0
30 TO 50	± 0.5	± 1.0	± 1.5
50 TO 80	± 0.6	± 1.2	± 2.0
80 TO 120	± 0.7	± 1.4	± 2.5
120 TO 180	± 0.8	± 1.6	± 3.0
180 TO 250	± 1.0	± 2.0	± 4.0
250 TO 315	± 1.2	± 2.5	± 5.0
315 TO 400	± 1.5	± 3.0	± 6.0
400 TO 500	± 1.8	± 3.5	± 7.0
500 OVER	± 0.4 %	± 0.8 %	± 1.5 %

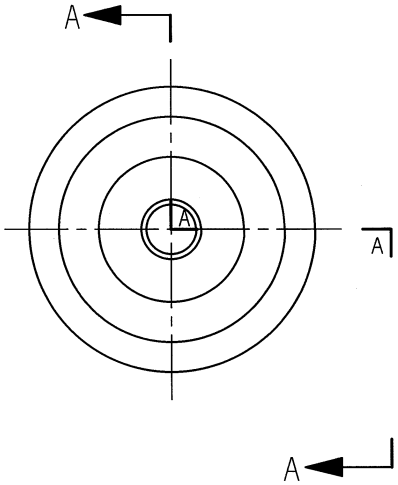

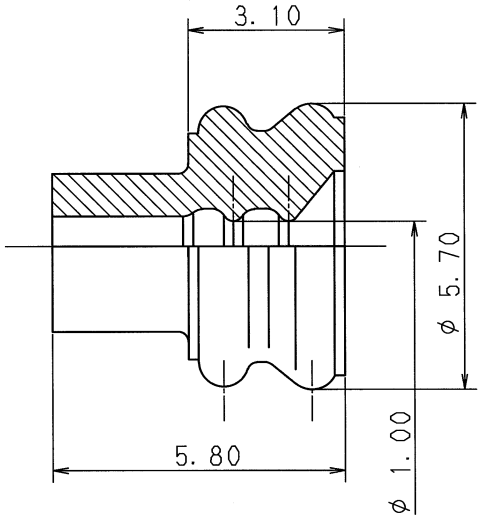

SEC. A-A

NOTES

⚠1 1. APPLICABLE WIRE SIZE : DIAMETER OF FINISHED CABLE φ1.30~φ1.90.

⚠2 2. PART NUMBERS IN PARENTHESIS SHALL BE USED FOR AIR BAG (A/B) CIRCUITS AND OTHER CIRCUITS DESIGNATED FOR SPECIAL MONITORING.

注記

⚠1 1. 適用電線サイズ : 仕上り外径φ1.30~φ1.90とする。

⚠2 2. ( ) 内品番は、エアバッグ (A/B) 回路及び特別管理回路に使用する時に適用すること。

ISSUE MARK

LET	DATE	REVISION RECORD	NO.	CHKD
⚠2	03.04.24	CHANGED COLOR & ADDED A/B PART NO.	C03-X302	Y.S
⚠1	97.05.21	CHANGED NOTE	C97-6989	T.S
	89.07.13	NEW	C89-L347	H.I

GENERAL TOLERANCE	10MAX	50MAX	100MAX	250MAX	2500VR	ANGLE	ECCENT
A	±0.15	±0.2	±0.3	±0.5	±0.75	±30′	0.1
B	±0.2	±0.3	±0.55	±0.95	±1.4	±30′	0.1
C	±0.3	±0.5	±0.8	±1.4	±2	±30′	0.15

SPECIFIED RUBBER PART GENERAL TOLERANCE 3

MASS g

CUSTOMER

CUSTOMER PART NO. | CUSTOMER DWG NO.

OFFICE | TRIAL PART NO.

VENDOR

VENDOR NO.

DWG TYPE	DWG SOURCE	DWG DATE	UNIT	SCL	ANGLE
R	NEW	89.07.13	mm	10/1	3

APPROVED	CHECKED	CHECKED	DESIGN	DRAWN
			TSUJI	Y. OHKUBO
03.04.25			88.10.06	03.04.24

MATL. SPEC. SILICONE RUBBER ⚠2(GREEN)

TREAT. & FIN.

NAME ⚠2 2.3Ⅱ(090Ⅱ) RUBBER STOPPER (USE FOR 5.30 DIA CAVITY)

PART NO. / CH. CODE 7157-3821 (7B57-3821)⚠2

DWG NO. 7157-3821:R

SET DWG NO.

YAZAKI CORPORATION