注記

1. 適用ターミナル品番 : 7114-3250、7116-3250

⚠2. 適用電線サイズ : AV 5、AV 8

⚠NOTES

1. APPLICABLE TERMINAL NO. : 7114-3250, 7116-3250

⚠2. APPLICABLE WIRE SIZE : AV 5, AV 8

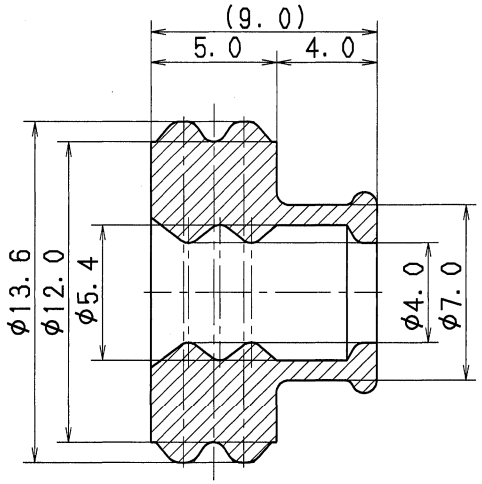

SEC. A-A

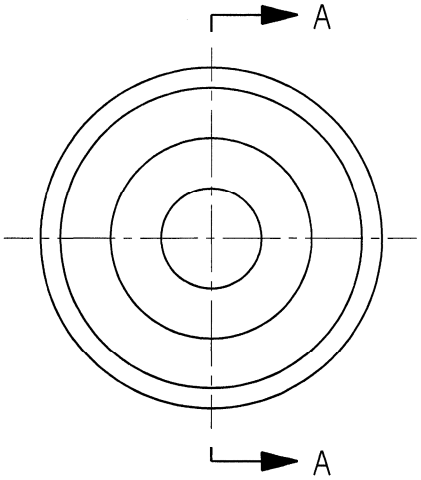

ISSUE MARK

LET	DATE	REVISION RECORD	NO.	CHKD
⚠2	2016/08/04	CHANGED NOTES, ETC.	C16-Z607	A. Q
⚠1	2016/02/01	ADDED NOTES, ETC.	C16-Z100	A. Q
	1987/04/27	NEW	7MC-4010	楠

GENERAL TOLERANCE

	10MAX	50MAX	100MAX	250MAX	2500VR	ANGLE	ECCENT
A	±0.15	±0.2	±0.3	±0.5	±0.75	±30′	0.1
B	±0.2	±0.3	±0.55	±0.95	±1.4	±30′	0.1
Ⓒ	±0.3	±0.5	±0.8	±1.4	±2	±30′	0.15

SPECIFIED

MASS g

CUSTOMER

CUSTOMER PART NO.

CUSTOMER DWG NO.

OFFICE

TRIAL PART NO. 087657-4100

VENDOR

VENDOR NO.

DWG TYPE	DWG SOURCE	DWG DATE	UNIT	SCL	ANGLE
R	NEW	1987/04/27	mm	5:1	3

APPROVED	CHECKED	CHECKED	DESIGN	DRAWN
M. NAKAMURA	—	—	KUSUNOKI	A. QUIROL
2016/08/04	—	—	1987/02/03	2016/08/04

MATL. SPEC. SILICONE RUBBER (RED IRON)

TREAT. & FIN.

NAME ⚠2Y TYPE SEAL RUBBER (5 8Sq)

PART NO. / CH. CODE 7157-3581-80

DWG NO. 7157-3581-80:R

SET DWG NO.

YAZAKI CORPORATION