GENERAL TOLERANCE											
	10 MAX	50 MAX	100 MAX	250 MAX	250 OVR	R5 MAX	R10 MAX	R20 MAX	R20 OVR	ANGLE	ECCENT
A	±0.15	±0.2	±0.3	±0.5	±0.75	±0.2	±0.3	±0.5	±2.5	±3°	0.1
B	±0.2	±0.3	±0.55	±0.95	±1.4					±3°	0.1
C	±0.3	±0.5	±0.8	±1.4	±2					±3°	0.15

2 PART NO. AND CH. CODE	COLOR
7183-4347	NATURAL
7183-4347-30	BLACK

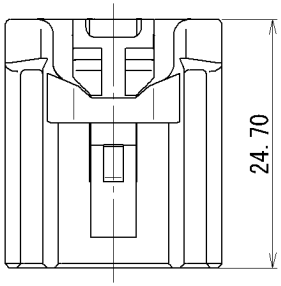

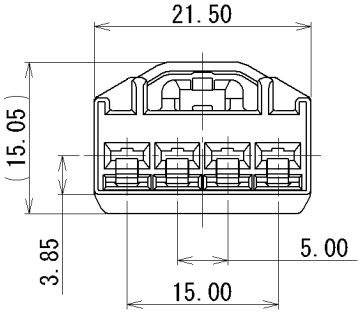

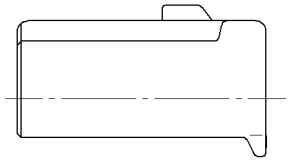

注 記

2 1. かん合相手品番 : 7183-4347:A (直結専用)
2. 適用端子品番 : 7116-4114-02 (CAVS 0.3～0.5)
: 7116-4115-02 (CAVS 0.85～1.25)
: 7116-4116-02 (AVSS 2～AVS 3)

NOTES

2 1. MATING PART NO. : 7183-4347 : A (DIRECT)
2. APPLICABLE TERMINAL NO. : 7116-4114-02 (CAVS 0.3～0.5)
: 7116-4115-02 (CAVS 0.85～1.25)
: 7116-4116-02 (AVSS 2～AVS 3)

ISSUE MARK

LET	DATE	REVISION RECORD	NO.	CHKD
2	11/01/11	ADDED COLOR PART NO. ETC.	C11-Z015	K. I
1	10/10/15	CHANGED PART NAME	C10-ZA78	M. A
	02/11/05	NEW	C02-Y324	K. Y

GENERAL TOLERANCE							
	10MAX	50MAX	100MAX	250MAX	250OVR	ANGLE	ECCENT
A	±0.15	±0.2	±0.3	±0.5	±0.75	±30'	0.1
B	±0.2	±0.3	±0.55	±0.95	±1.4	±30'	0.1
C	±0.3	±0.5	±0.8	±1.4	±2	±30'	0.15

SPECIFIED

MASS

CUSTOMER

CUSTOMER PART NO. | CUSTOMER DWG NO.

OFFICE | TRIAL PART NO.

VENDOR

VENDOR NO.

DWG TYPE	DWG SOURCE	DWG DATE	UNIT	SCL	ANGLE
R	NEW	02/11/05	mm	2:1	3

APPROVED	CHECKED	CHECKED	DESIGN	DRAWN
H. KONDO	K. SUZUKI	K. IKEYA	K. YOSHIDA	E. ITALIA
11/01/11	11/01/11	11/01/11	01/09/04	11/01/11

MATL. SPEC. 2 PBT (COLOR:SEE TABLE)

TREAT. & FIN.

NAME 1 110 4P HOUSING FEMALE

PART NO. CH. CODE 2 7183-4347 ETC.

DWG NO. 7183-4347:R

SET DWG NO.

YAZAKI CORPORATION