GENERAL TOLERANCE											
	10 MAX	50 MAX	100 MAX	250 MAX	250 OVR	R5 MAX	R10 MAX	R20 MAX	R20 OVR	ANGLE	ECCENT
A	±0.15	±0.2	±0.3	±0.5	±0.75	±0.2	±0.3	±0.5	±2.5	±3°	0.1
B	±0.2	±0.3	±0.55	±0.95	±1.4					±3°	0.1
©	±0.3	±0.5	±0.8	±1.4	±2					±3°	0.15

ASSEMBLY PART NO.	NO.	PART NO.	PART NAME	MATERIAL	COLOR	QTY.
△1 7183-3190 (7B83-3190)	①	△1 7114-5171-02 (7B14-5171-02)	△1 1.0Ⅲ(040Ⅲ) JOINT CONNECTOR 4P TERMINAL	BRASS	———	1
				PBT	NATURAL	1

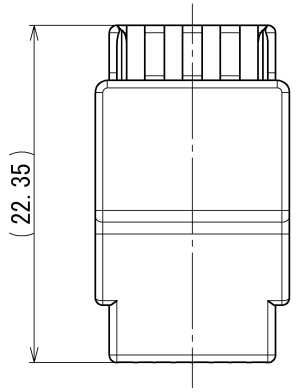

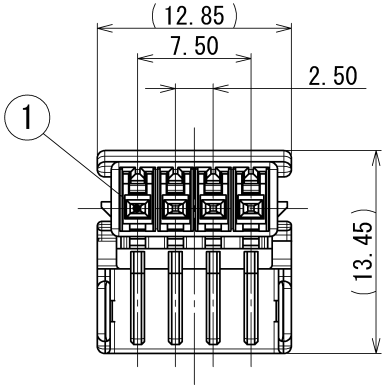

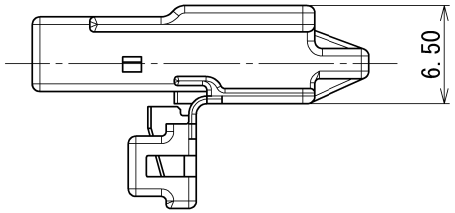

注記

1. 適用端子品番：7116-4231-02

△1 2. ( ) 内品番は、エアバッグ (A/B) 回路及び特別管理回路に使用する時に適用すること。

NOTES

1. APPLICABLE TERMINAL PART NO.:7116-4231-02

△1 2. PART NUMBERS IN PARENTHESIS SHALL BE USED FOR AIR BAG (A/B) CIRCUITS AND OTHER CIRCUITS DESIGNATED FOR SPECIAL MONITORING.

ISSUE MARK

LET	DATE	REVISION RECORD	NO.	CHKD
△2	11.01.12	CHANGED PART NAME	C11-ZA18	M.A
△1	08.11.17	ADDED A/B PART NO., ETC.	C08-Z785	T.K
	04.02.27	NEW	C04-Z137	J.G

GENERAL TOLERANCE							
	10MAX	50MAX	100MAX	250MAX	250OVR	ANGLE	ECCENT
A	±0.15	±0.2	±0.3	±0.5	±0.75	±30'	0.1
B	±0.2	±0.3	±0.55	±0.95	±1.4	±30'	0.1
C	±0.3	±0.5	±0.8	±1.4	±2	±30'	0.15

SPECIFIED

MASS

CUSTOMER

CUSTOMER PART NO. | CUSTOMER DWG NO.

OFFICE | TRIAL PART NO.

VENDOR

VENDOR NO.

DWG TYPE	DWG SOURCE	DWG DATE	UNIT	SCL	ANGLE
R	NEW	04.02.27	mm	3/1	3

APPROVED	CHECKED	CHECKED	DESIGN	DRAWN
S.MIZUSE	———	R.DE GUZMAN	T.KOBAYASHI	M.ALAGAR
11.01.12	———	11.01.12	03.09.01	11.01.12

MATL. SPEC. SEE TABLE | TREAT. & FIN.

NAME △2 1.0Ⅲ(040Ⅲ) 4P JOINT CONNECTOR

PART NO. CH. CODE △1 7183-3190 (7B83-3190)

DWG NO. 7183-3190:R | SET DRW NO.

YAZAKI CORPORATION