TABLE 1

SUB ASSEMBLY PART NO. AND CH. CODE	NO.	PART NO. AND CH. CODE	MATERIAL	COLOR	⚠QTY.
7282-1010 ETC.	①	SEE TABLE 2	③HPA	SEE TABLE 2	1
	②	7157-4088 ⚠(7B57-4088)	③HPA	NATURAL	1

④TABLE 2

SUB ASSEMBLY PART NO. AND CH. CODE	PART NO. AND CH. CODE	COLOR
7282-1010, Ⓒ ⚠(7C82-1010)	7182-1010 ⚠(7B82-1010)	NATURAL
7282-1010-10, Ⓒ	7182-1010-10	DARK GRAY
7282-1010-30, Ⓒ	7182-1010-30	BLACK
7282-1010-40, Ⓒ	7182-1010-40	LIGHT GRAY
7282-1010-50, Ⓒ	7182-1010-50	ORANGE
7282-1010-90, Ⓒ	7182-1010-90	BLUE

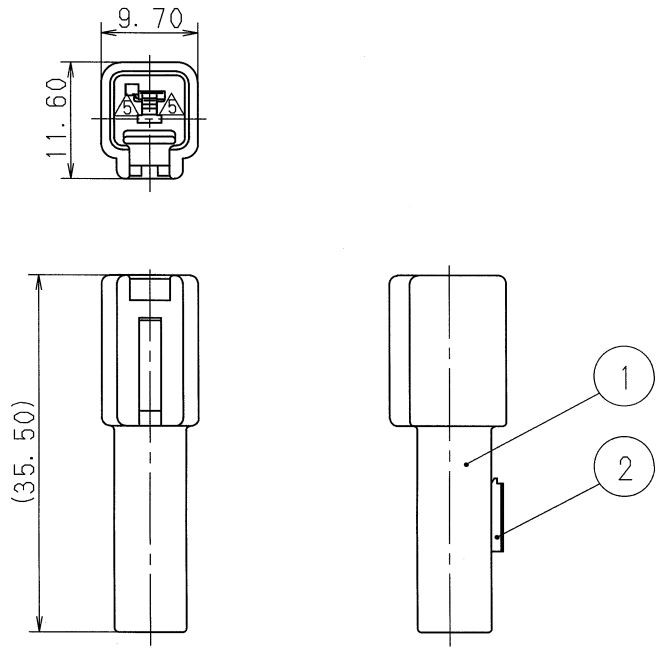

注 記

⑤ 1. 適用端子品番：7114-4020 ETC.

⚠ 2. ( ) 内品番は、エアバック (A/B) 回路及び特別管理回路に使用する時に適用すること。

⚠ 3. 嵌合相手品番：7283-1010 ETC.

NOTES

⑤ 1. APPLICABLE TERMINAL NO. :7114-4020 ETC.

⚠ 2. PART NUMBERS IN PARENTHESIS SHALL BE USED FOR AIR BAG (A/B) CIRCUITS AND OTHER CIRCUITS DESIGNATED FOR SPECIAL MONITORING.

⚠ 3. MATING PART NO. :7283-1010 ETC.

LET	DATE	REVISION RECORD	NO.	CHKD
⑤	03.03.20	CORRECT ALL ERROR	C03-X211	H.T
④	98.12.17	CHANGED NOTE & ELIMINATED COLOR NO.	C98-N160	T.M
③	97.07.08	CHANGED MATERIAL, Ⓒ	C97-M293	H.K
②	97.03.10	CHANGED MATERIAL, Ⓑ	C97-L457	H.K
⚠	97.02.17	CHANGED MATERIAL & ADDED A/B PART NO., Ⓐ	C97-L063	H.K
	92.09.15	NEW	C92-6892	T.M

GENERAL TOLERANCE

	10MAX	50MAX	100MAX	250MAX	2500VR	ANGLE	ECCENT
A	±0.15	±0.2	±0.3	±0.5	±0.75	±30′	0.1
B	±0.2	±0.3	±0.55	±0.95	±1.4	±30′	0.1
Ⓒ	±0.3	±0.5	±0.8	±1.4	±2	±30′	0.15

SPECIFIED

MASS g

ISSUE MARK

CUSTOMER

CUSTOMER PART NO. | CUSTOMER DWG NO.

OFFICE | TRIAL PART NO.

VENDOR

VENDOR NO.

DWG TYPE	DWG SOURCE	DWG DATE	UNIT	SCL	ANGLE
R	NEW	92.09.15	mm	⚠2/1	3

APPROVED	CHECKED	CHECKED	DESIGN	DRAWN
川上円	石田		K. JINNO	M. TAKEUCHI 田中U
'03.3.26	03.03.26		89.02.02	03.03.20

MATL. SPEC. SEE TABLE 1 | TREAT. & FIN.

NAME ⑤ 2.3Ⅱ (090Ⅱ) 1P CONNECTOR

SUB ASSEMBLY MALE

PART NO. CH. CODE ⚠ 7282-1010 ETC. (7C82-1010)

DWG NO. 7282-1010:R | SET DWG NO.

YAZAKI CORPORATION