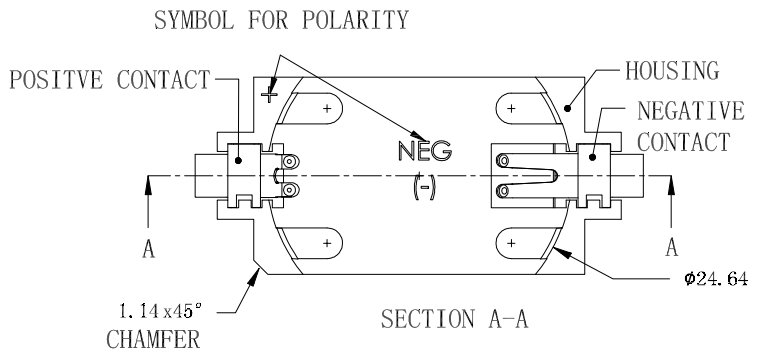


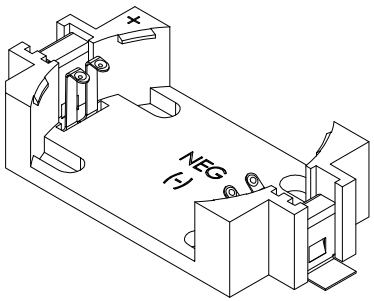


NOTE:

1.MATERIAL
① 1.1 Base:Glass Filled LCP,UL94V-0,Color :Beige
1.2 Contact:0.15mm Thickness Phosphor Bronze, Au or Tin over Nickel

2.Packing:Tape & Reel
Order Code:A-BAT-CH-CB-EG-xSR2
- G:Gold Flash
- Z:Tin

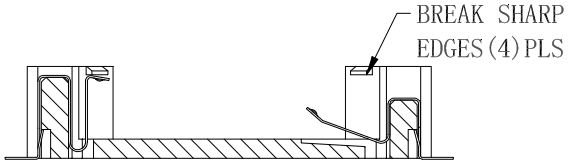


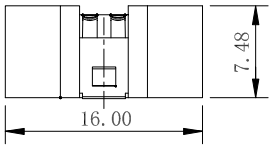


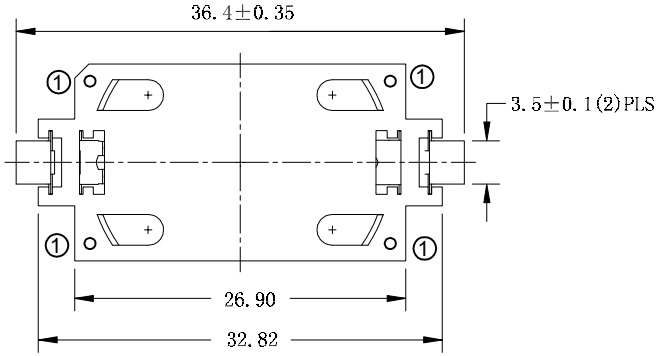


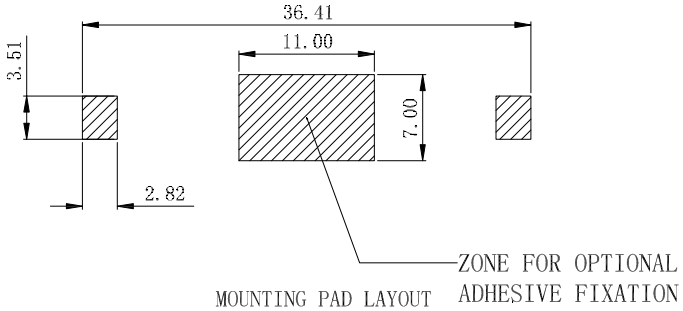


RoHS compliant
unit:mm

| Scale | Free |
|---|---|
| TOLERANCE | |
| X. | ±0.35 |
| .X | ±0.25 |
| .XX | ±0.20 |
| .XXX | ±0.15 |
| DIM | TOL |
| | |
| Angle | TOL |

| Id. | modification | Date | Name |
|---|---|---|---|
| ① | Update the appearance &add the insulator color | 10.17.2022 | Winnie |
| ⓪ | Drawn | 12.20.2021 | Peter |

| | Date | Name |
|---|---|---|
| Drawn | 12.20.2021 | Peter |
| Approved | 10.17.2022 | Peter |

ASSMANN WSW components

Description: Coin Cell Holders CR2450 Type

ASSMANN WSW-NO.
A-BAT-CH-CB-EG-xSR2

Drawing-No.
ASS 9171 CO

rev01

Customer-No.

SHEET 1 / 1