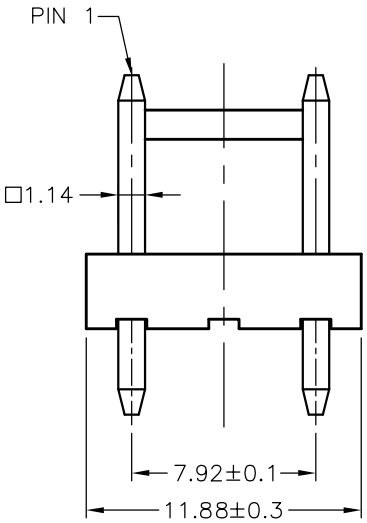

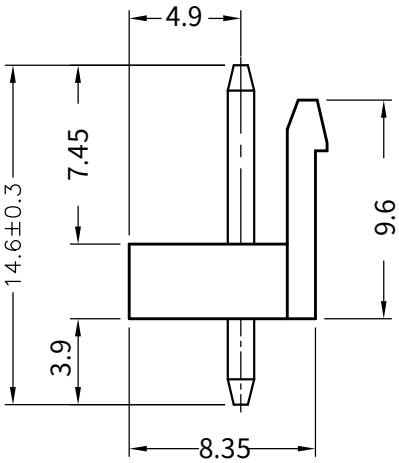

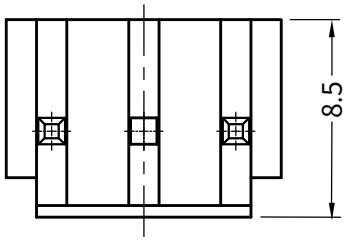

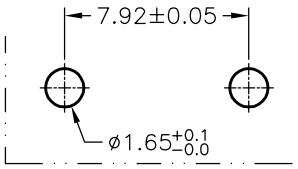

RECOMMENDED HOLE PATTERN

■ Specifications :

- Voltage rating: 250V AC / DC
- Current rating: 7A AC / DC
- Withstanding voltage: 1500V AC/minute
- Temperature range: -25°C~+85°C
- Insulation resistance:≥1000MΩ
- Contact resistance: ≤10mΩ
- After environmental testing：≤20mΩ

9396 W V-XX- 1
① ② ③ ④ ⑤

① Series No
② Category：W-WAFER
③ Welding Board Angle：V-180°
④ Row No.-Pin No: 03P
⑤ A kick in the middle: 1

9396WV-03-1	Nylon 66 UL 94V-0	Brass	Tin-Plated	9396 H
PART N0	Material	Material(Pin)	Finish(Pin)	

————	new		2015/5/3		A	瀚源
ECN BO.	DESCRIPTION.		DATE.		REV.	
DESIGNED	CHECKED	APPROVAL	DRAWING NUMBER		SCALT: 1/2	SCALE: 3:1
Mikey	Tom	Jerry	PART NAME	9396WV-XX-1	UNLESS OTHERWISE SPECIFIED,TOLERANCE:	X. ±0.25 X.x ±0.20 X.xx ±0.15 ANGULAR ±3°
			MODEL NAME	9396WV-XX-1		
			3RD ANGLE PROJ	HanElectricity Co.,LTD		FILE.NO.