REV.	DESCRIPTION	ECN NO.	NAME	DATE

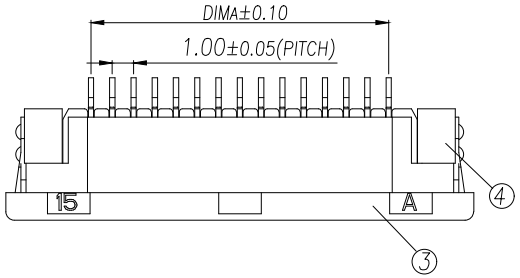

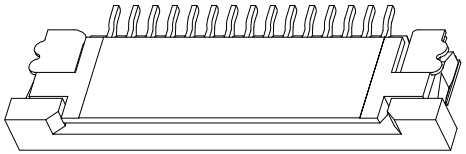

Part No	Pin	A	B	C
FC-10D4P11H25	4	3.00	5.03	11.10
FC-10D5P11H25	5	4.00	6.03	12.10
FC-10D6P11H25	6	5.00	7.03	13.10
FC-10D7P11H25	7	6.00	8.03	14.10
FC-10D8P11H25	8	7.00	9.03	15.10
FC-10D9P11H25	9	8.00	10.03	16.10
FC-10D10P11H25	10	9.00	11.03	17.10
FC-10D11P11H25	11	10.00	12.03	18.10
FC-10D12P11H25	12	11.00	13.03	19.10
.....	....	...	.....	.....
FC-10D40P11H25	40	(40-1)*1.0	(40+1)*1.0+0.03	(40+6)*1.0+0.10

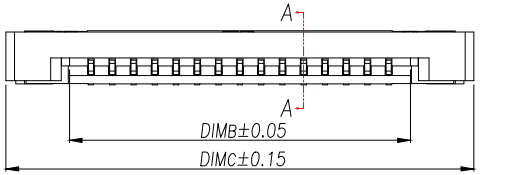

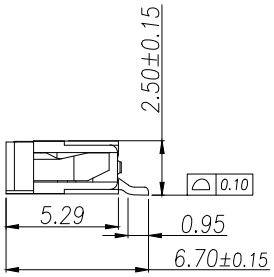

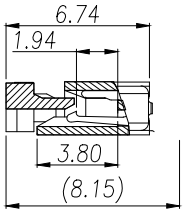

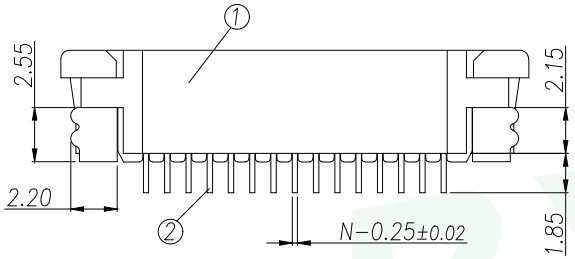

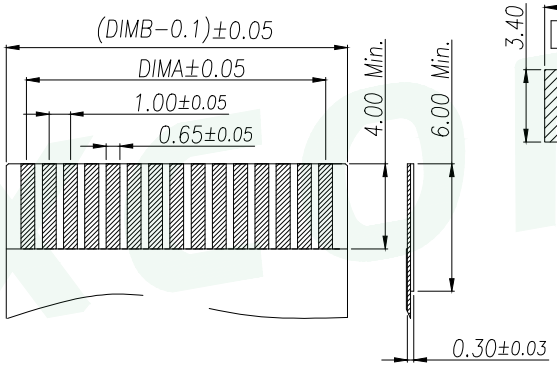

适用扁平线(Applicable Flat Cable)

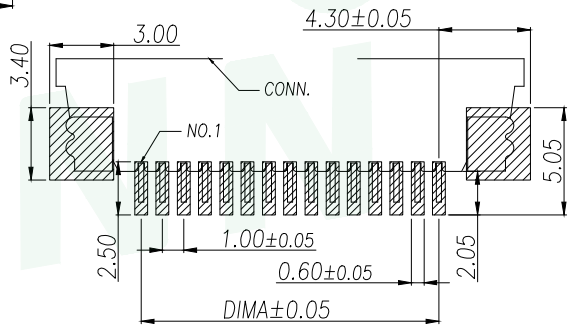

适用线路板(PCB LAYOUT)

序号	品名	材质
1	1.0胶壳(H2.5)	LCP UL94V-0 本色
2	1.0下接端子(H2.5)	铜合金/表面镀锡
3	1.0卧式后盖(H2.5)	LCP UL94V-0 黑色
4	1.0卧式焊片(H2.5)	铜合金/表面镀锡

技术指标:

1.塑件表面应光洁、无毛边、无明显收缩、缺陷、裂纹等现象.
2.温度范围:-25°C~+85°C.
3.额定电压:50V,AC/DC.
4.接触电阻:≤0.03Ω.
5.绝缘电阻:≥500MΩ

GENERAL TOLERANCE	DONGGUAN BAOXUN PRECISION TECHNOLOGY CO., LTD				BXCONN®
DIM. TOL. X X.X ±0.30 X.XX ±0.25 X.XXX ±0.15 GENERAL ANGLE: ±3°	TITLE: 1.0 Pitch H2.5 ZIF R/A Type Under CONN				
	DWG. NO.: FC-10DNP11H25			DRAWN: MAX	
	PART NO.: FC-10DNP11H25			CHECKED: ELLA	
	UNIT: mm	SCALE: none	SHEET: 1of 1	DWG. SIZE: A4	LAYER: bxconn	APPROVED: WILL