REV.	DESCRIPTION	ECN NO.	NAME	DATE

General tolerances(mm)														
0 ~ 3	>3 ~ 6	>6 ~ 10	>10 ~ 18	>18 ~ 30	>30 ~ 50	>50 ~ 80	>80 ~ 120	>120 ~ 180	>180 ~ 250	>250 ~ 315	>315 ~ 400	>400 ~ 500	>500	0.1/10
±0.12	±0.18	±0.22	±0.26	±0.31	±0.37	±0.57	±0.80	±0.93	±1.05	±1.15	±1.60	±2.20	±2.50	±2°

Product model	PIN	A	B
JCB508-HKGC2P	2	11.66	5.08
JCB508-HKGC3P	3	16.74	10.16
JCB508-HKGC4P	4	21.82	15.24
JCB508-HKGC5P	5	26.90	20.32
JCB508-HKGC6P	6	31.98	25.40
JCB508-HKGC7P	7	37.06	30.48
.....	....	.....	.....
JCB508-HKGC24P	24	5.08xN+1.5	5.08X(N-1)

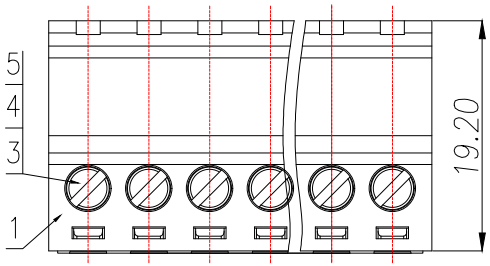

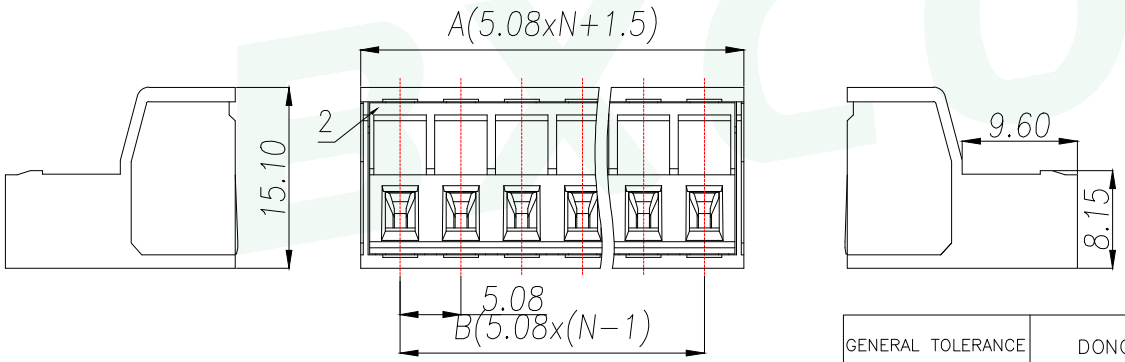

UL Standard	B	C	D
Rated Voltage(V)/Current(A)	300/15	/	300/10
IEC Standard			
Overvoltage Category/Pollution Degree	III/3	III/2	II/2
Rated Voltage(V)/Current(A)	/	320/20	/
Withstanding voltage(V/1Min)	AC2000		
Torque Tightening(N·m/Lb.in)	M2.5, 0.4/3.54		
Wire Range(rigid and flexible)(mm²/AWG)	0.2~2.5/28~12		
Pitch(mm)/Poles	5.08/N=02~24P		
Stripping length(mm)	7-8		
Operating temperature(°C)	-40~+105		
Conform to RoHS	Yes		

ITEM	NAME OF PART	MATERIAL	NOTES
5	Screws	Steel	M2.5/Zn Plated
4	Cage	Copper alloy	Ni plated
3	Pin	Copper	Sn plated
2	Cover	PA66	UL94V-0
1	Housing	PA66	UL94V-0

GENERAL TOLERANCE	DONGGUAN BAOXUN PRECISION TECHNOLOGY CO., LTD					BXCONN®
DIM. TOL. X X.X ±0.30 X.XX ±0.25 X.XXX ±0.15 GENERAL ANGLE: ±3°	TITLE: Socket-type terminal					
	DWG. NO.: JCB508-HKGCNP				DRAWN: MAX	
	PART NO.: JCB508-HKGCNP				CHECKED: ELLA	
	UNIT: mm	SCALE: none	SHEET: 1of 1	DWG. SIZE: A4	LAYER: bxconn	APPROVED: WILL