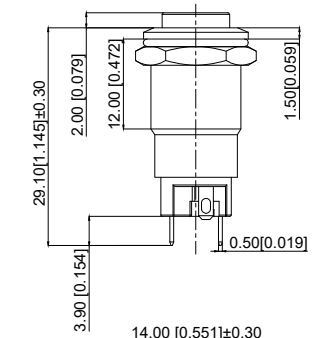

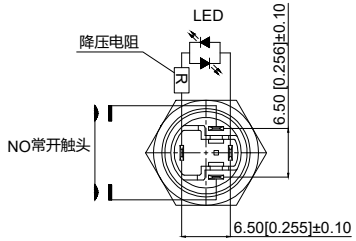

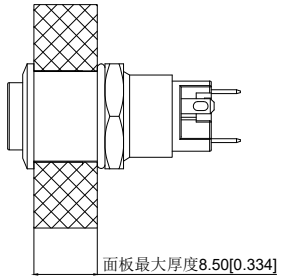

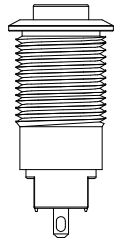

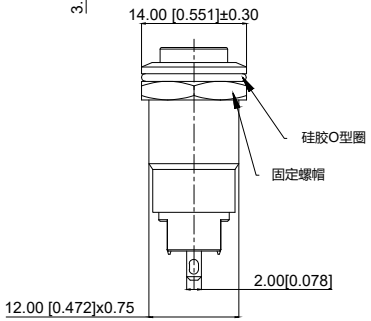

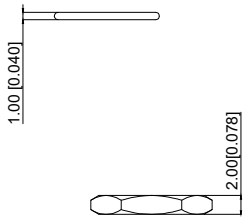

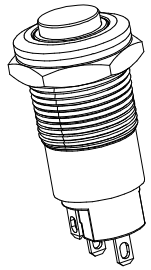

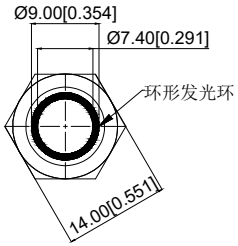

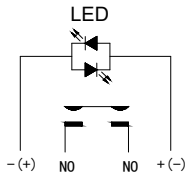

Schematic Diagram
电气原理图

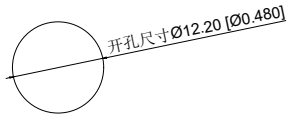

Installation View
安装视图

REV	DATE	REVISION DESCRIPTION	ISSUE
A4			
A3			
A2			
A1			

台普 ROCPU

COMMON TOLERANCE	
X.XX	± 0.10
X.X	± 0.15
X	± 0.25
ANGULAR	——

UNIT	MM	PROJCTED		PRODUCT NAME:
DRAWN BY	FUYUAN	CHECKED BY	COCO	MODEL NO: TP91218G124RA
DATE	2019	APPROVAL B	ALEN	Https: www.rocpu.tw

ROCPU TECHNOLONGY CO.,LTD

Copies are issued in strict confidence and shall not be reproduced or copied,or used as the basic of manufacture or sale of apparatus without permission

性能参数

1. Heating current: Ui: AC250V, Ith: 3A
   发热电流: Ui: AC250V, Ith: 3A
2. Rated current:2A/DC36V
   额定电流:2A/DC36V
3. Insulation resistance:≥1000MΩ
   绝缘电阻 :≥1000MΩ
4. Contact resistance:≤50mΩ
   接触电阻 :≤50mΩ
5. Pressing stroke:2.30mm ± 0.10
   按压行程:2.30mm ± 0.10
6. Contact stroke:1.00mm±0.10
   接触行程 :1.00mm±0.10
7. welding temperature：320 ℃± 20 ℃
   焊接温度：320 ℃± 20 ℃
8. Welding duration：Less than 3 seconds in duration
   焊接时长：Less than 3 seconds in duration
9. Nut assembly torque:5-14N
   螺帽装配力矩:5-14N
10. Protection level:IP65
    防护等级:IP65
11. Explosion prevention level：IK08
    防暴等级：IK08
12. Working environment temperature：-20 ℃~+55 ℃
    工作环境温度：-20 ℃~+55 ℃
13. Compression torque：≤ 3N
    按压扭力：≤3N
14. Electrical life：500000 cycles
    电气寿命：500000 cycles
15. mechanical：500000cycles
    机械寿命：500000cycles
16. Operation method:Self-locking
    操作方式：自锁式
17. NO reverse thrust foot torque：≤30N
    NO反推脚扭力：≤30N
18. LED lamp power consumption：20m以下
    LED灯功耗：20m以下
19. LED lamp lifespan：40000h
    LED寿命：40000h
20. LED color :Red
    LED颜色: 红色

A4			
A3			
A2			
A1			
REV	DATE	REVISION DESCRIPTION	ISSUE

台普 ROCPU

COMMON TOLERANCE	
X.XX	± 0.10
X.X	± 0.15
X	± 0.25
ANGULAR	——

UNIT	MM	PROJCTED		PRODUCT NAME:
DRAWN BY	FUYUAN	CHECKED BY	COCO	MODEL NO: TP91218G124RA
DATE	2019	APPROVAL B	ALEN	Https: www.rocpu.tw

ROCPU TECHNOLONGY CO.,LTD

Copies are issued in strict confidence and shall not be reproduced or copied,or used as the basic of manufacture or sale of apparatus without permission

材质参数

NO 序号	Part name 部件名	Material 材料	QTY 数量	Remark 备注
10	luminous zone 发光区	PC 塑料	1	
9	LEDpin LED脚	Brass 黄铜	1	Silvering 镀银
8	Base 底座	PA66	1	Black 黑色
7	Pin 引脚	Brass 黄铜	1	gold-plating 镀金
6	Contact material 接触材质	Silvering 镀银	1	
5	Base 基座	PA66	1	Black 黑色
4	Arm nut 固定螺帽	Brass 黄铜	1	nickeling 镀镍
3	Oring O型圈	Silica gel 硅胶	1	
2	Housing 外壳	Aluminum alloy 铝合金	1	Oxidized/Black 氧化/黑色
1	Key 按键	Aluminum alloy 铝合金	1	Oxidized/Black 氧化/黑色

REV	DATE	REVISION DESCRIPTION	ISSUE
A4			
A3			
A2			
A1			

台普 ROCPU

COMMON TOLERANCE	
X.XX	± 0.10
X.X	± 0.15
X	± 0.25
ANGULAR	——

UNIT	MM	PROJCTED		PRODUCT NAME:
DRAWN BY	FUYUAN	CHECKED BY	COCO	MODEL NO: TP91218G124RA
DATE	2019	APPROVAL B	ALEN	Https: www.rocpu.tw

ROCPU TECHNOLONGY CO.,LTD

Copies are issued in strict confidence and shall not be reproduced or copied,or used as the basic of manufacture or sale of apparatus without permission