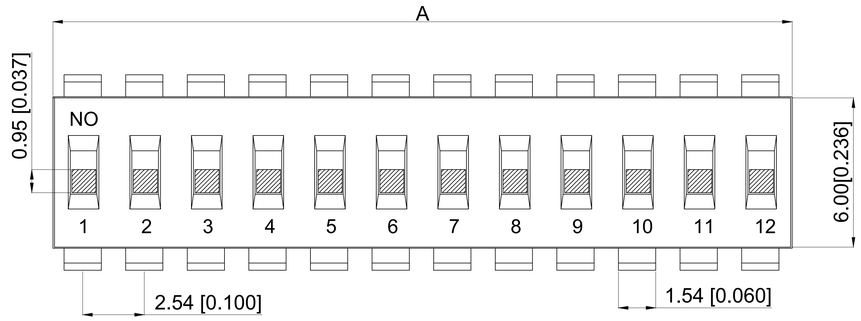

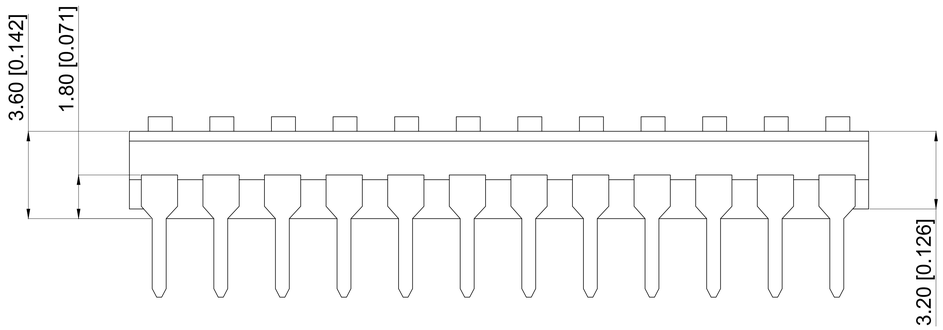

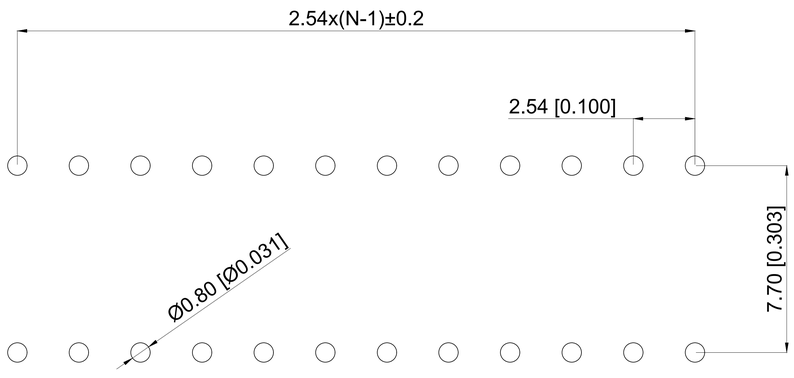

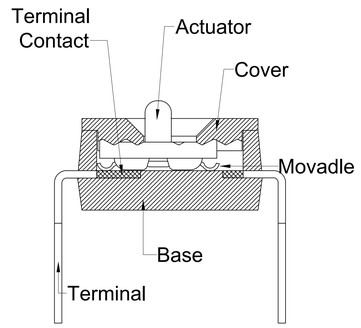

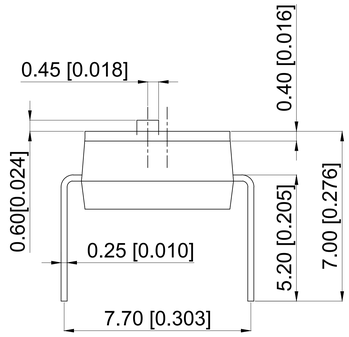

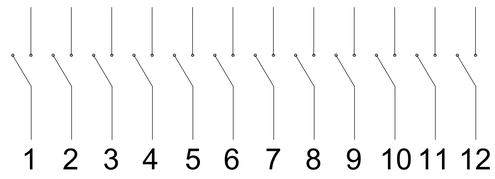

SCHEMATIC

Switching:25mA at 24VDC
Non-Switching:100mA at 50VDC
Initial:50m Ω Max
After life:100mΩ Max
Insulation Resistance:100mΩ Min,60 sec at 500VDC
Dielectyic Strength:500VAC for 60seconds
Swith Capacitance:5pF Max at 1MHZ
Operation Temperature:-30℃to + 85℃
Storage Temperature:-40℃to + 85℃
Operation Force:500gf Max
Mechanicai Life:3000 cycles opertions
Resistance to Soldering:260±5℃ for 3-5 seconds

Poles(N)	A Dimension(mm)
01	2.54
02	5.08
03	7.62
04	10.16
05	12.70
06	15.24
07	17.78
08	20.32
09	22.86
10	25.40
12	30.48

Part Name	Material	Finished
Base	PPS UL94 VO	Black
Cover	PPS UL94 VO	Black
Actuator	Nylon UL94 VO	White
Movadle	Copper Alloy	Gold
Terminal Contact	Brass	Gold
Terminal	Brass	Gold/Tin

A4		Terminal	
A3			
A2			
A1			
REV	DATE	REVISION DESCRIPTION	ISSUE

台普 ROCPU

COMMON TOLERANCE	
X.XX	± 0.10
X.X	± 0.15
X	± 0.25
ANGULAR	——

UNIT	MM	PROJCTED		PRODUCT NAME:
DRAWN BY	FUYUAN	CHECKED BY	COCO	MODEL NO: TAM112EZ
DATE	2019	APPROVAL B	ALEN	Https: www.rocpu.tw

ROCPU TECHNOLONGY CO.,LTD

Copies are issued in strict confidence and shall not be reproduced or copied,or used as the basic of manufacture or sale of apparatus without permission